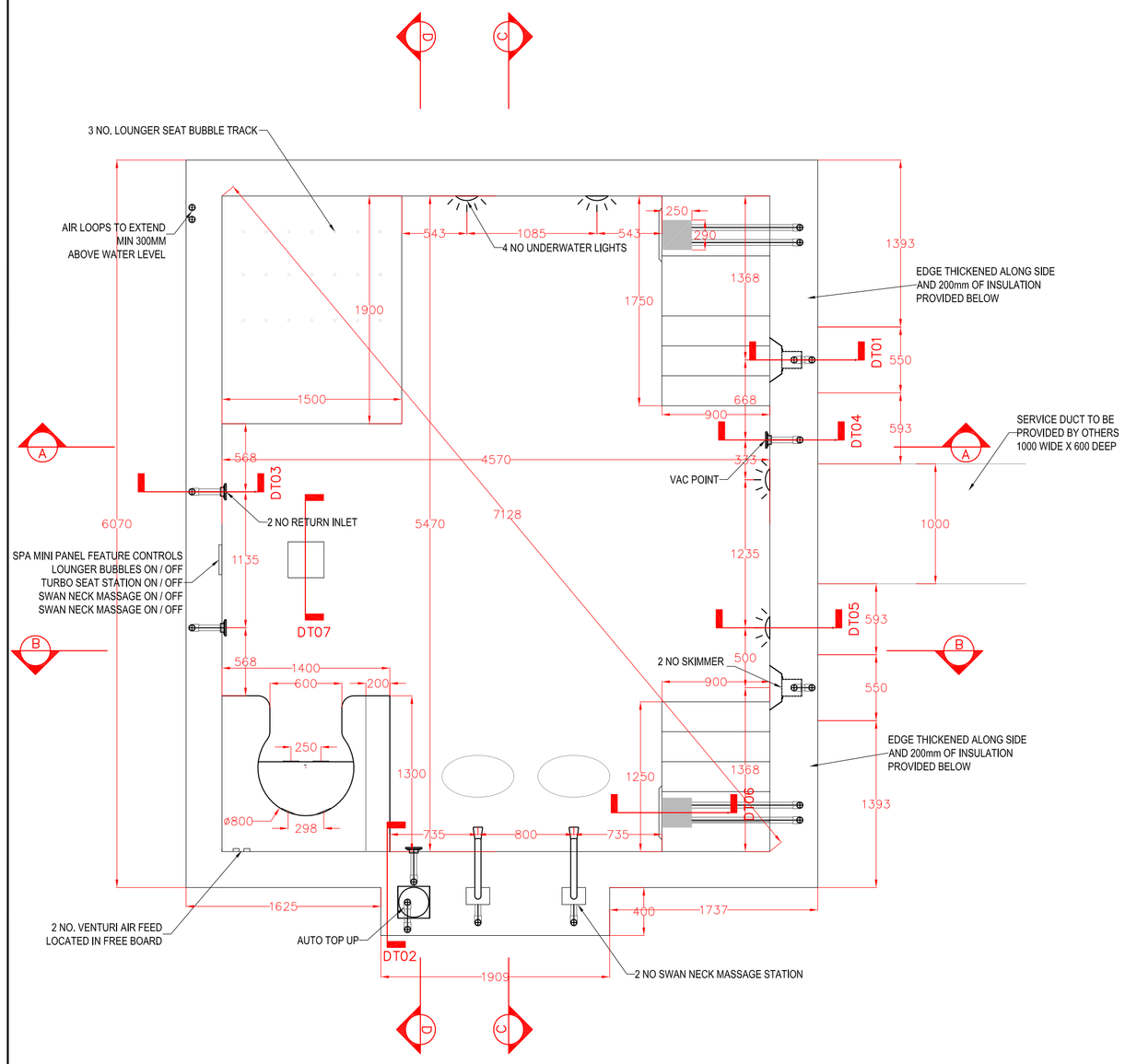

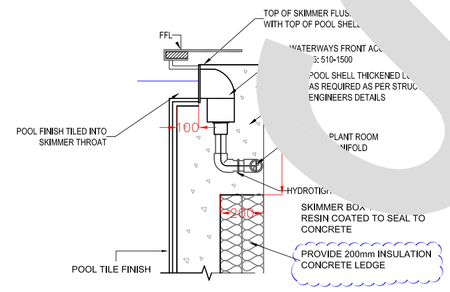

DT01 SECTION THROUGH SKIMMER ASSEMBLY
2 No. SWIMMING POOL

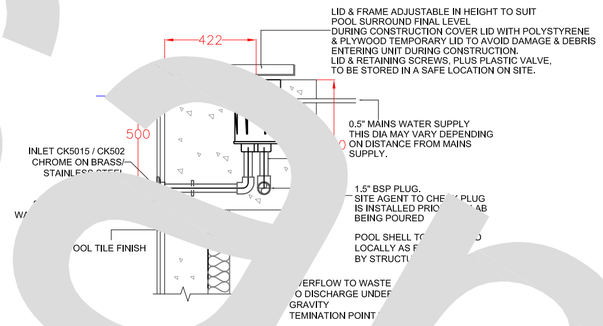

DT02 SECTION THROUGH AUTOMATIC WATER TOP UP) ASSEMBLY
1 No. SWIMMING POOL

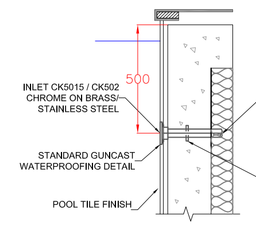

TION THROUGH RETURN INLET ASSEMBLY
MING POOL

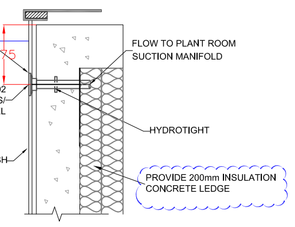

DT04 SECTION THROUGH VAC POINT ASSEMBLY
1 No. SWIMMING POOL

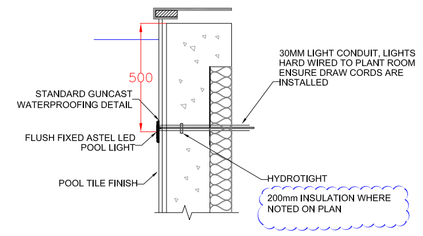

DT05 SECTION THROUGH LED LIGHT FITTING
4 No. SWIMMING POOL

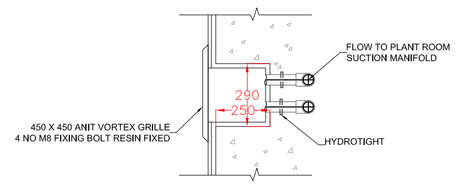

DT06 SECTION THROUGH LOW LEVEL SUMP OUTLET
2 No. SWIMMING POOL

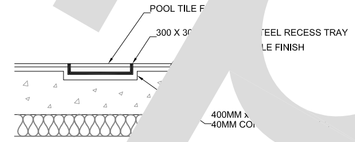

DT07 SECTION THROUGH O EMPTYING TRAP
1 No. SWIMMING POOL

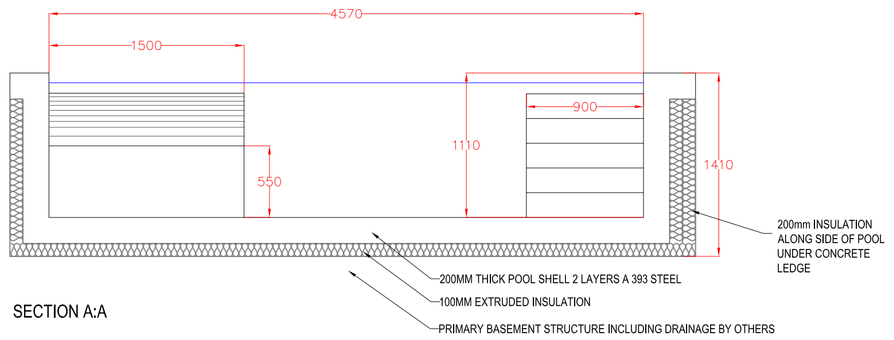

SECTION A:A

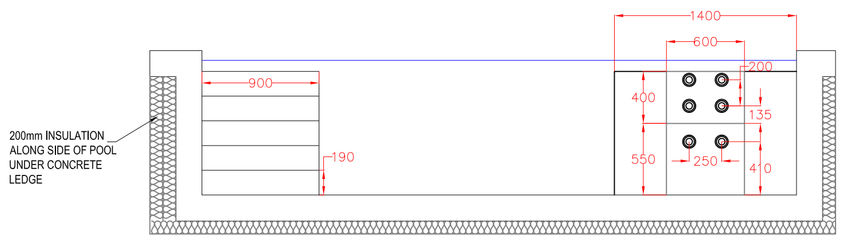

SECTION B:B

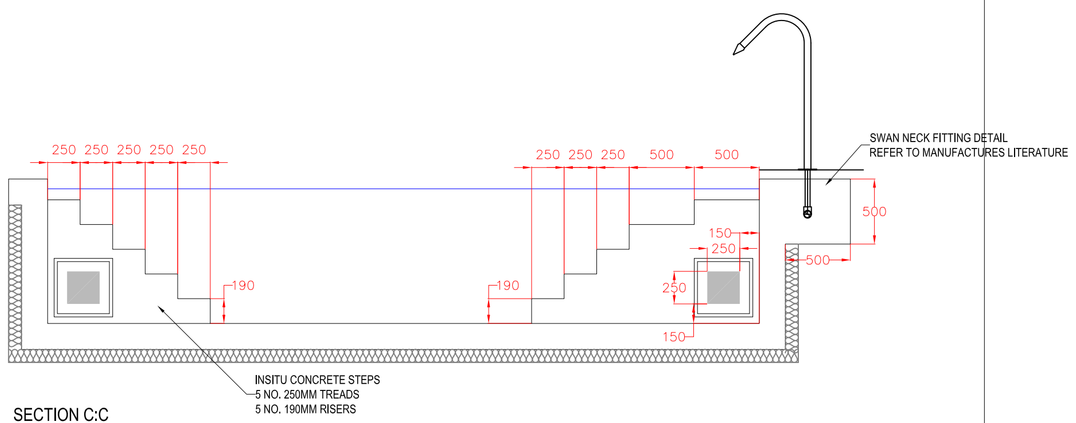

SECTION C:C

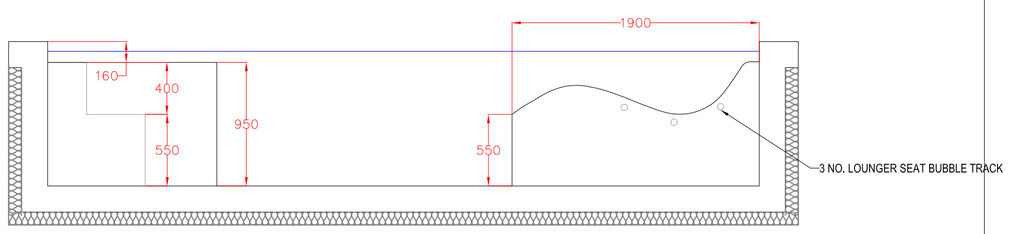

SECTION D:D

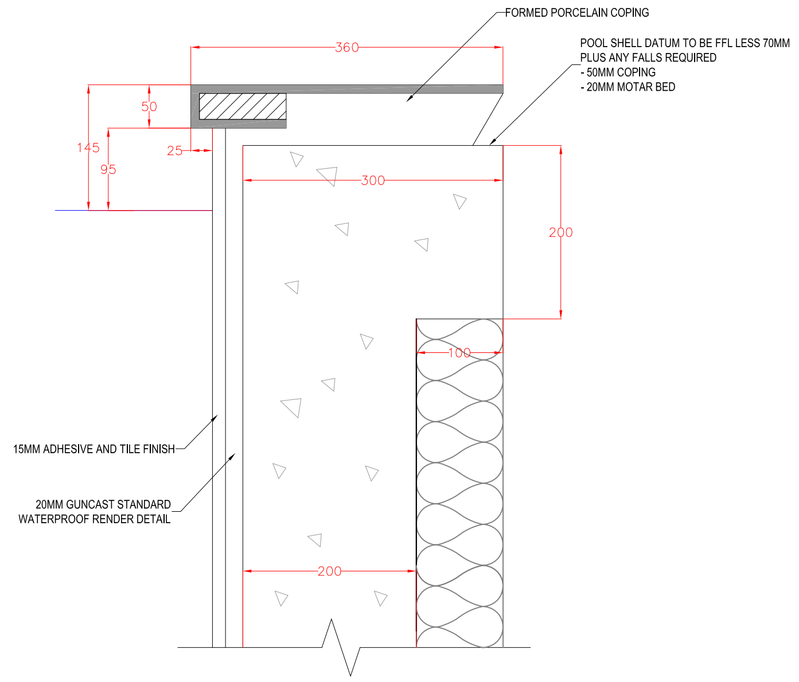

Sample

This document is the property Guncast Swimming Pools Ltd, which has exclusive rights to proprietary trade secrets and confidential information contained herein. Receipt of permission to use this document does not convey any rights to use any of the information contained herein without prior written permission of Guncast Swimming Pools Ltd.

Copyright ©2013 . Guncast Swimming Pools Ltd All Rights Reserved

GUNCAST SWIMMING POOLS LTD

Sales & Design, Unit L The Old Bakery, Petworth, West Sussex GU28 0AP.
Tel: +44 (0) 1798 343725
www.guncast.com

REVISIONS

Revision	Date	Description	Revised by

TITLE: Indoor Vitality Pool GA Plan and Section

PROJECT:	SAMPLE DESIGN	CLIENT:	
DATE:	17.03.14	REVISION:	
SCALE:	1:50 & 1:15 & 1:10 @ A1	STATUS:	construction
DRAWN BY:	CHECKED BY: -	APPROVED BY: -	

CONTRACT/PROJECT /ENQUIRY NUMBER: 1003

DRAWING/SKETCH NUMBER: 1003-1

DRAWING SHEET NUMBER: Sheet 1 of 1